OBFM120 product information sheet

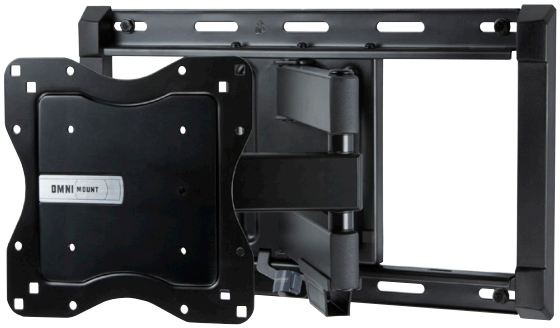

Designed with enhanced flexibility and affordability in mind, the OBFM120 is a full motion mount ideal for a wide range of large TVs, including 3D and LED TVs. The OmniBasics Series offers adaptability and a streamlined look at an affordable price – perfect for consumers looking for sensible mounting solutions.

Product Benefits

- Low 3.5" (89mm) mounting profile
- Tilt, pan and swivel for maximum viewing flexibility
- Streamlined arms nest for a compact 3.5" (89mm) mounting profile
- Low-friction washers for fluid movement
- Includes adapter for greater VESA compatibility
- Lift n' Lock™ allows you to easily attach your TV to the mount
- Integrated cable management guides wires
- Efficient product design and eco-friendly packaging
- Includes installation template and stud finder with level for simple and accurate mounting
- Includes complete hardware kit

Product Specifications

Fits most: 43–70" TVs
Supports up to: 120 lbs (54.4 kg)
Tilt: +15° to -5°
Mounting profile: 3.5" (89mm)*
Maximum extension: 18.3" (346mm)*
Universal & VESA compliant: 100wx100h to 600wx600h
Mounting: Double-stud
UL Listed: Yes
Warranty: 5 years
Color: Black

*adapter adds 0.2" (4mm)

Series

OBT60

OBT120

OBFM60

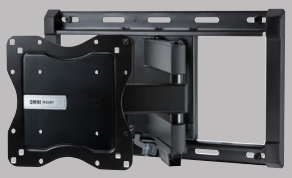

OBFM120

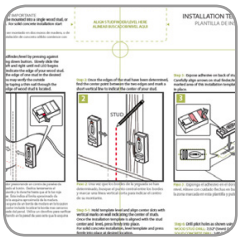

OmniBasics Series mounts include an easy-to-use installation template and stud finder with level for simple and accurate mounting.

800.MOUNT.IT (800.668.6848)

OBFM120 technical data sheet

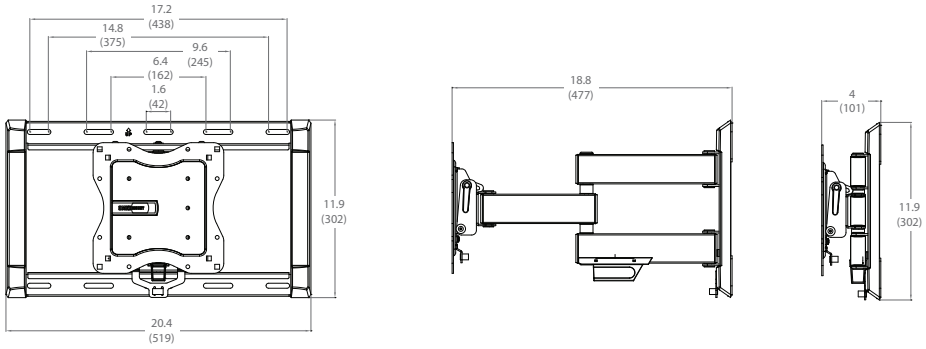

Without Adapters

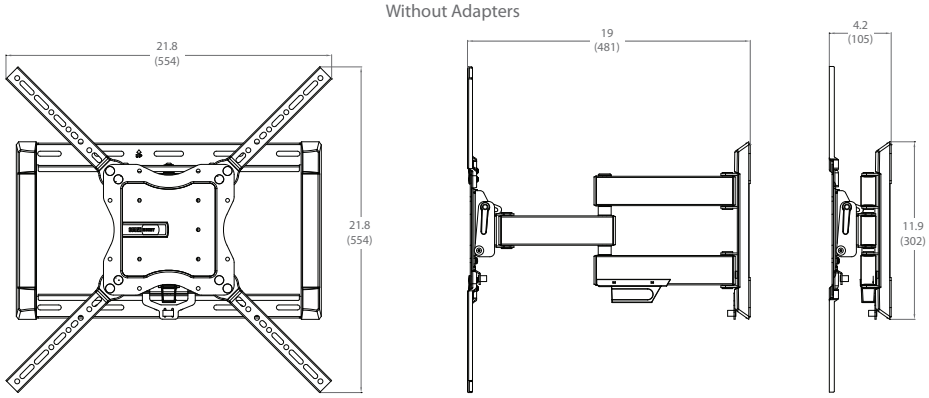

With Adapters

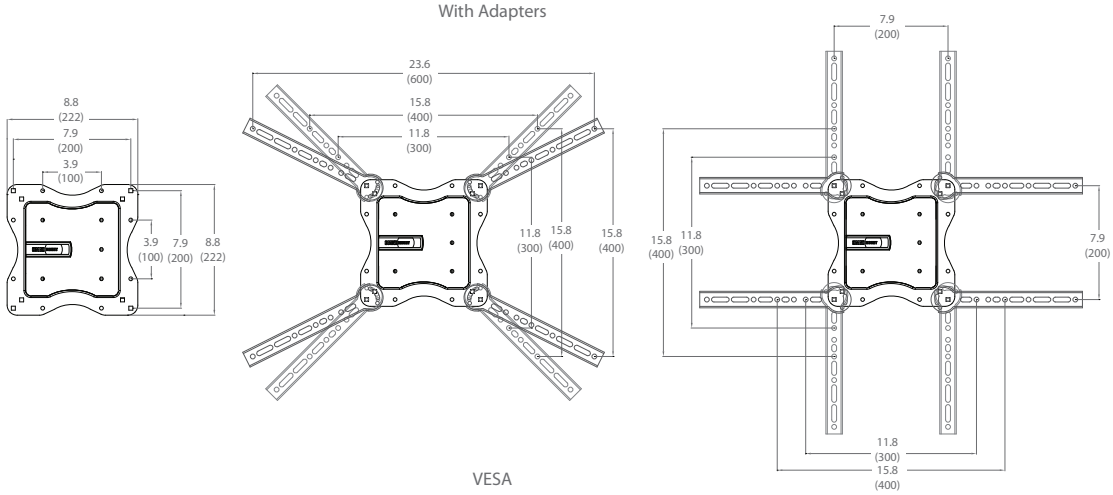

VESA

inches (mm)

	Finished Good	Packaging UPC	MC UPC
Americas	61-182-223	698833043105	10698833043102
INT	61-182-223	698833043105	10698833043102

	Dimensions WxDxH Inches (mm)	Wt lbs (kg)	Qty
Box	23.2 x 4.5 x 12.8 (589x115x325)	18.7 (8.5)	NA
MC	24.3 x 10.1 x 13.6 (618x257x345)	39.7 (18)	2

Box Contents	Qty
Wall plate	1
Arm assembly	1
TV plate	1
Arm cable management	1
Hook/loop cable management	2

Box Contents	Qty
Tilt tension lever	2
Extension adapter	4
Stud finder/lever	1
Instruction manual	1
Complete hardware kit	1